1919~2019 anniversary

HunterDouglas Architectural

Innovative Product Make Innovative Projects



Product Presentation



Hunter Douglas India - Plant



HunterDouglas Architectural

DESIGN I FUNCTIONALITY I COMFORT

we have been fortunate enough to help turn countless innovative ideas into products for innovative buildings. We contribute to thousands of high-profile projects including shopping centres, airports, metro stations, HSR, government offices, hospitals, universities, schools and offices.

Curved Ceilings are the perfect way to create arches and multilevel designs. The curve doesn't need to stop at the ceiling. Luxalon® Curved ceilings can partially – or completely - clad surrounding walls. With excellent acoustic properties and a variety of colours, finishes and curved options, these panels make it possible to create virtually any ceiling design you can imagine.

CURVED CEILINGS ARE POSSIBLE

Hunter Douglas Curved Carrier you can create curved shaped ceilings with straight panels. This design is possible when you use the Multi Panel system and the panel systems with 84B, 84R, 70U and 300C.

PRODUCTS PHILOSOPHY

Design

Hunter Douglas Architectural offer unparalleled design freedom. A wide range of choices is available with different materials, shapes, systems, coatings and colors, which help turn design ideas into reality.

Functionality

Hunter Douglas Architectural boast outstanding performance, including environmental protection, heat insulation, weatherproof, acoustical performance, optical performance, fireproof, intelligent control system and more, thus adding more values to buildings.

Comfort

Adhering to the principle of "human-orientation", Hunter Douglas Architectural help designers control noise, insulate heat and regulate light and heat, so as to create comfortable, healthy and efficient indoor/outdoor environments.

GREEN PRO CERTIFIED

Indian Green Building Council
MEMBER

Hunter Douglas India Adopts Green Products Certification For Holistic Approach Based On The 'Life Cycle' And 'Green Measures' Of The Product.

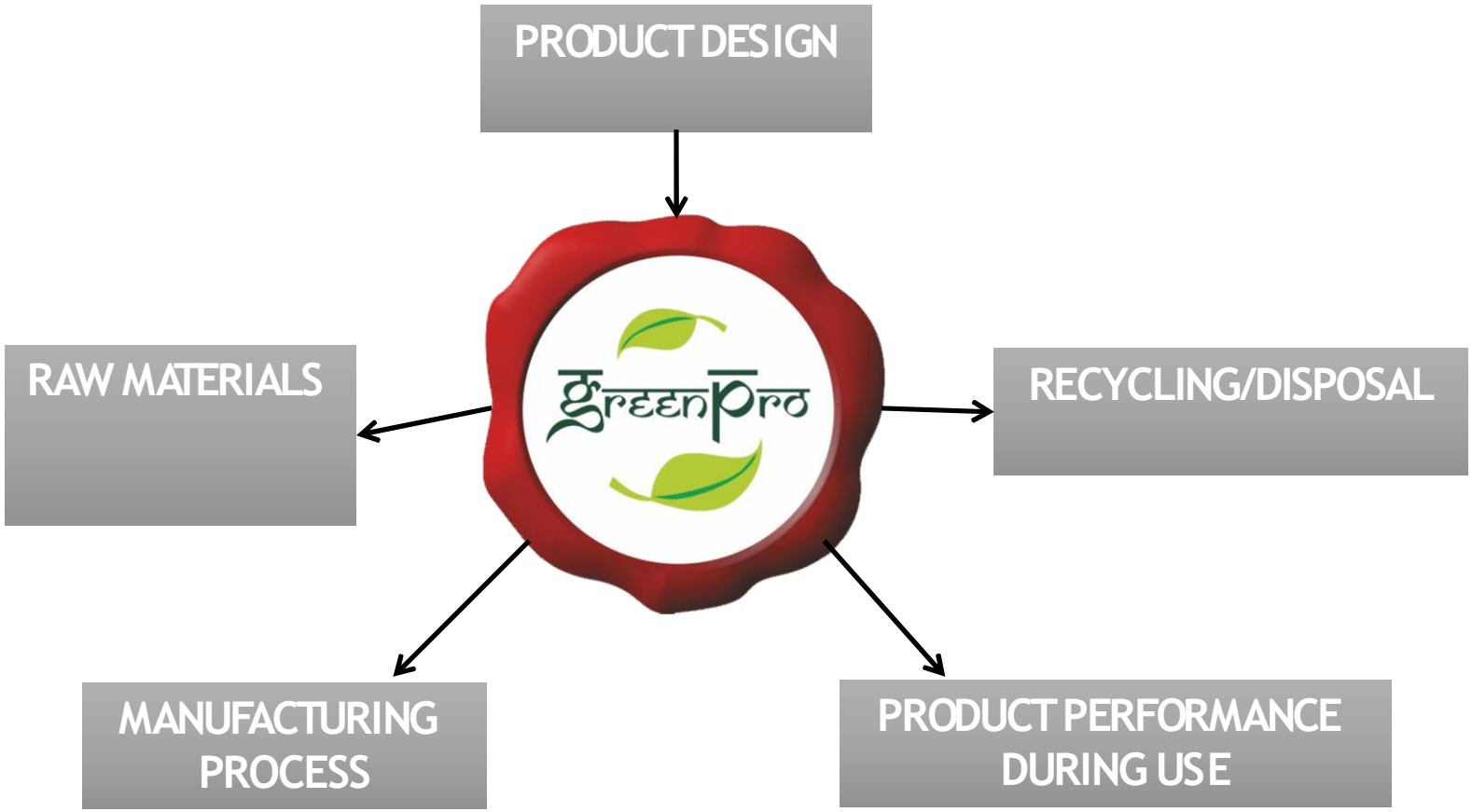

84R

Sun Louver

HunterDouglas Architectural

84R LOUVRES

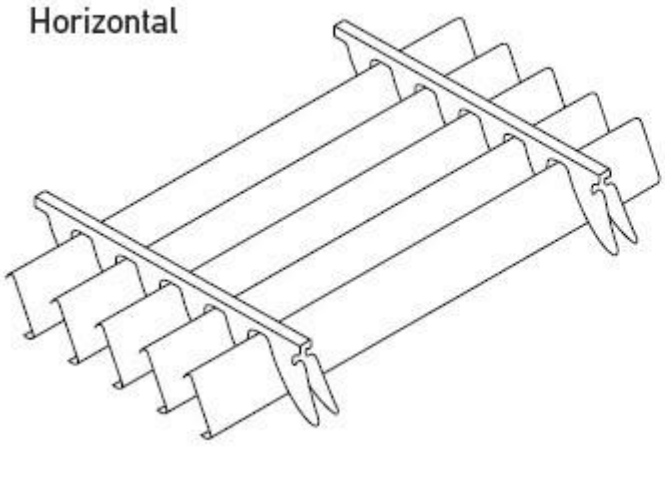

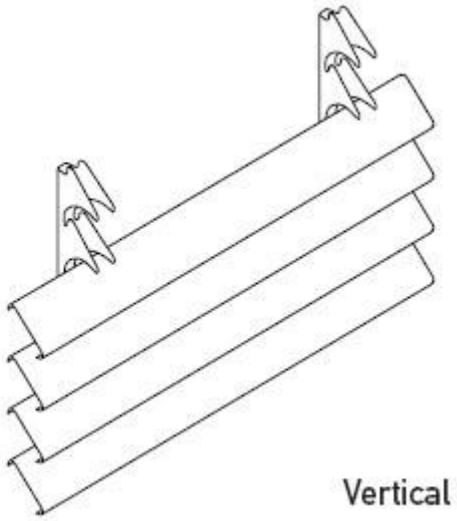



HunterDouglas Architectural

SINGLE SKIN LOUVER SYSTEM – 84R



HunterDouglas Architectural

84R – SUN LOUVER SYSTEM

Pune Metro – Dapodi and Bopodi Station



RUBAMIN LTD. HALOL

Products : 84R Sun Louver

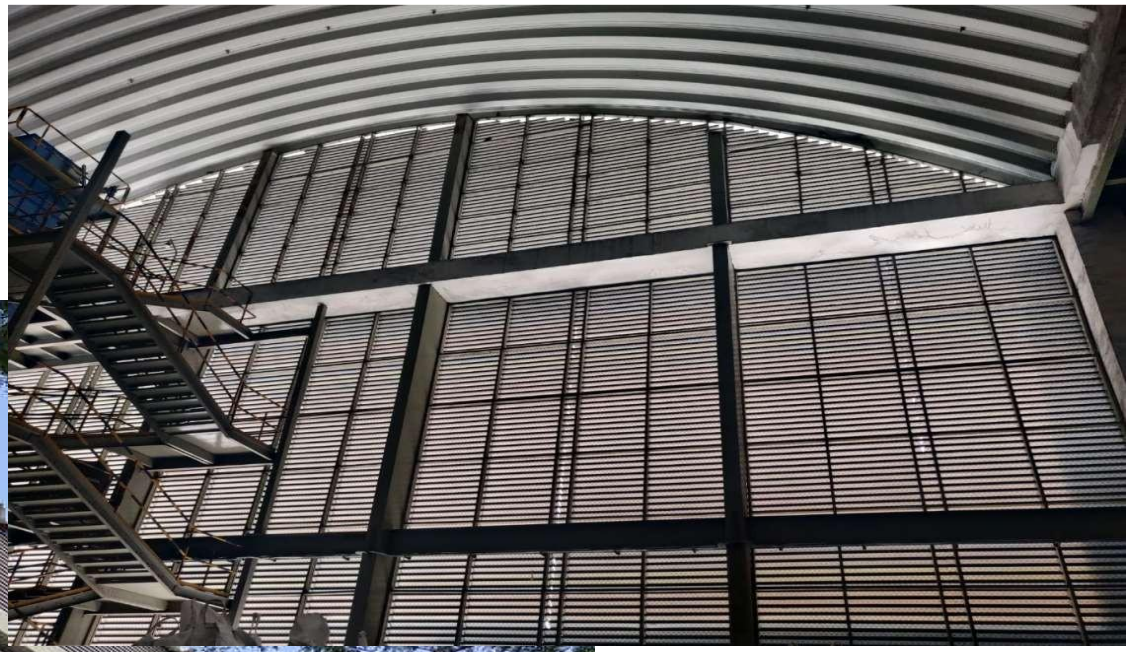



HunterDouglas Architectural

KATIRA CONSTRUCTIONS, INDORE

Products : 84R Sun Louver

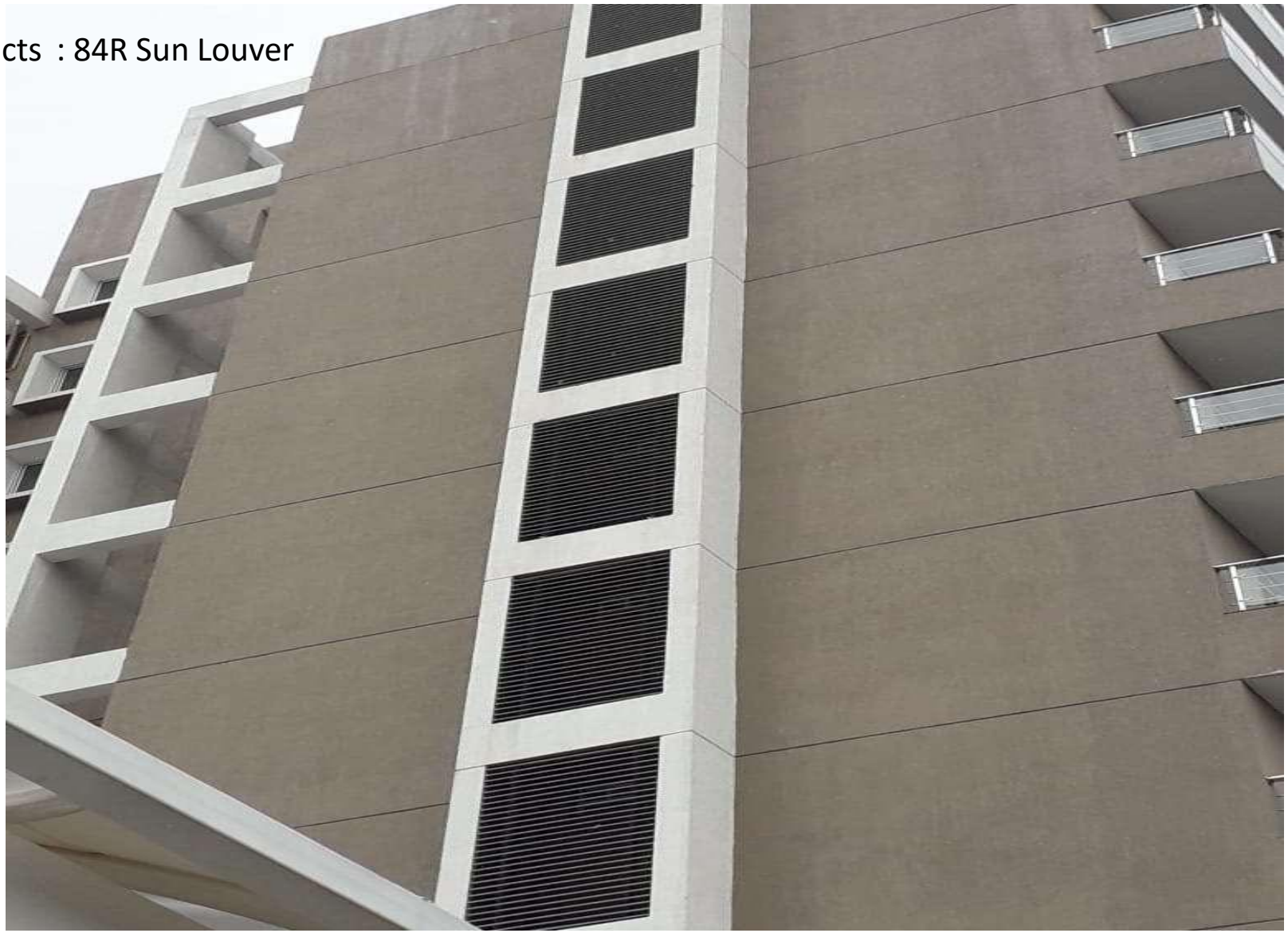



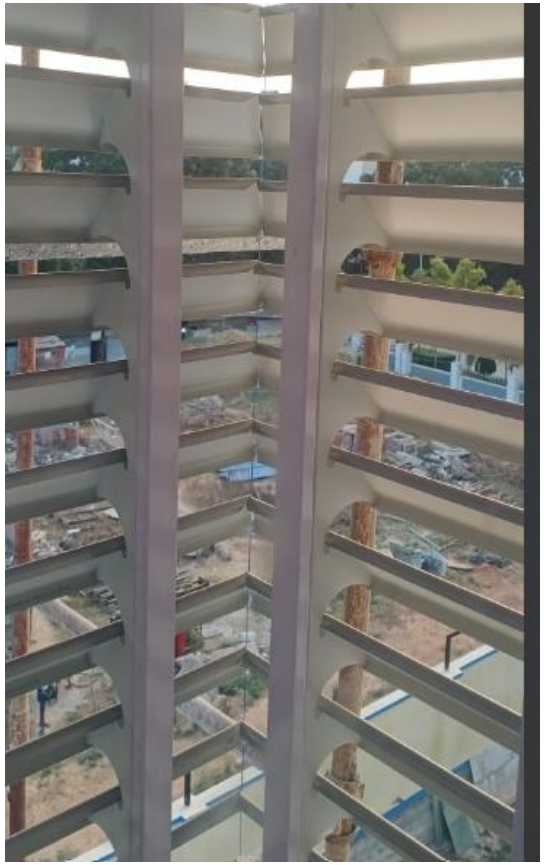

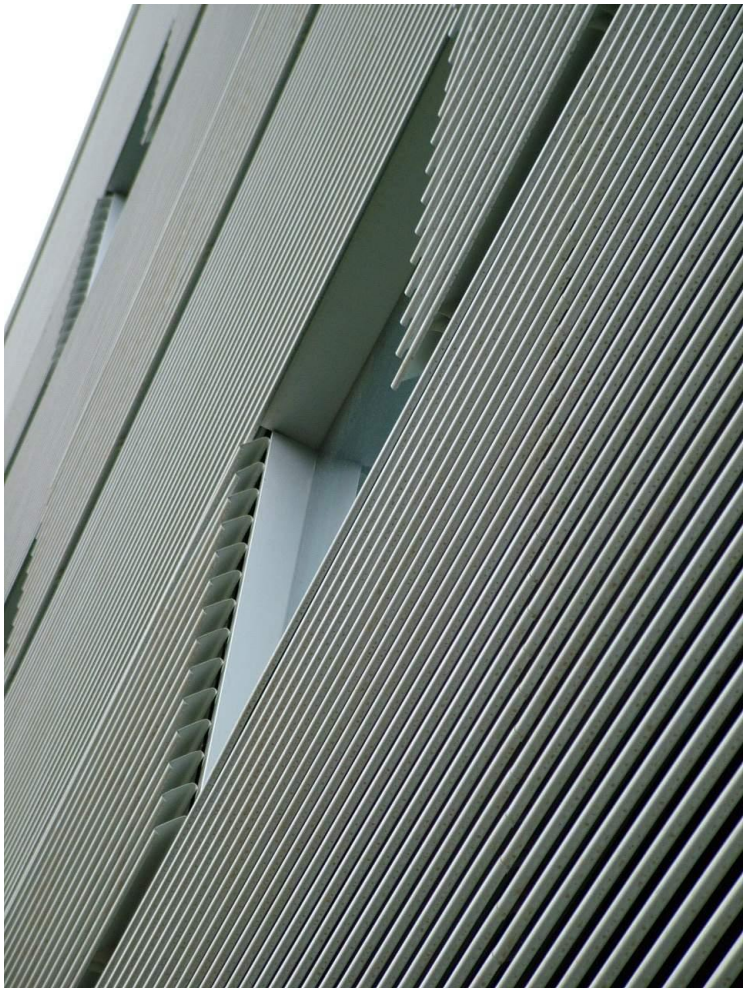



70S / 132S

SUN LOUVER

HunterDouglas Architectural

70S AND 132S SUN LOUVERS



HunterDouglas Architectural

132S – SUN LOUVERS

Project : SNS
Location : Surat , India
Product : 132S Sun Louvers





HunterDouglas Architectural



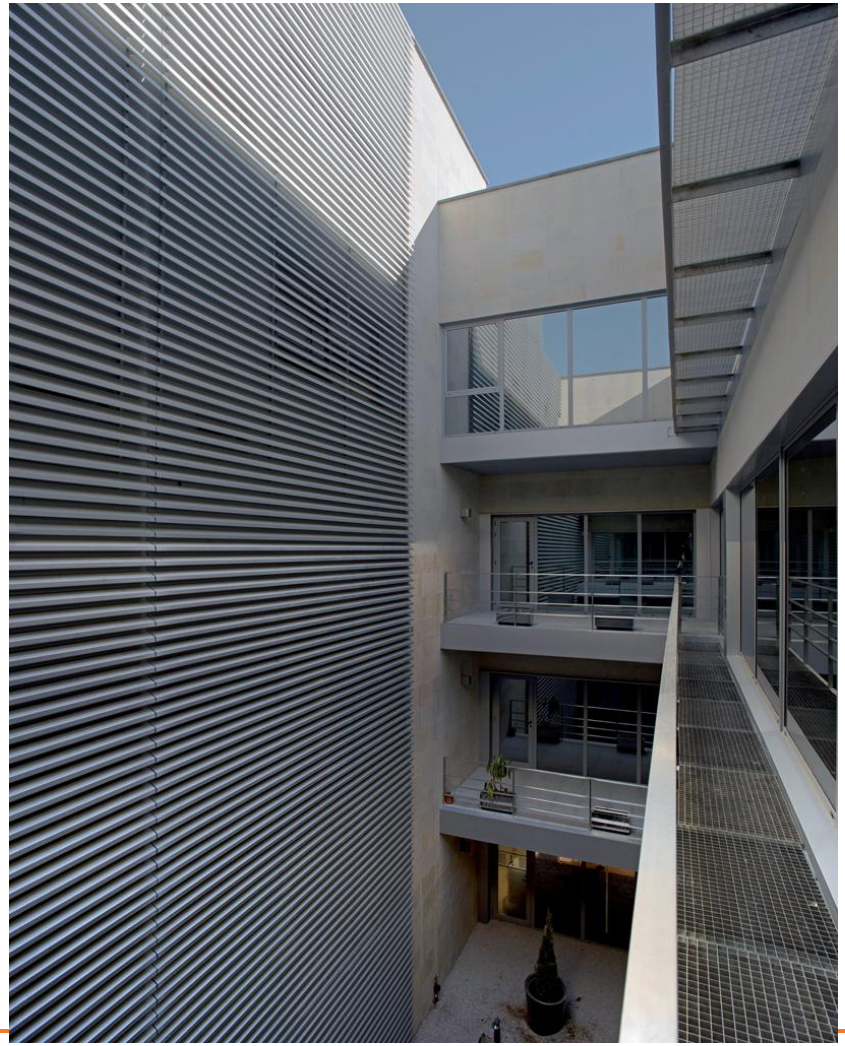



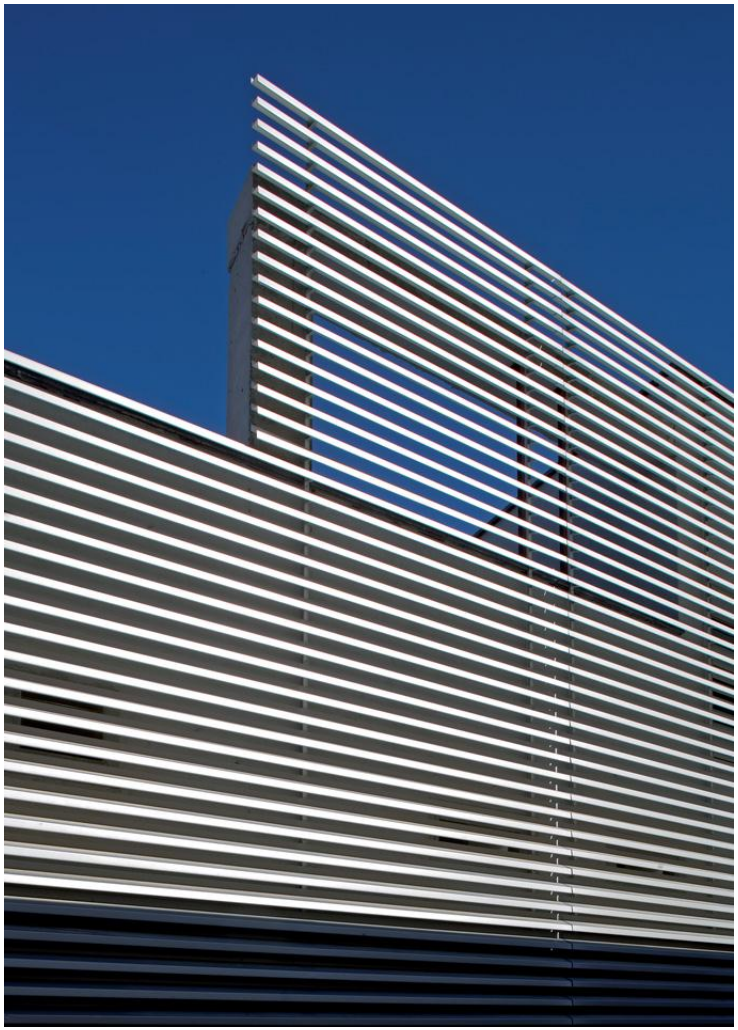

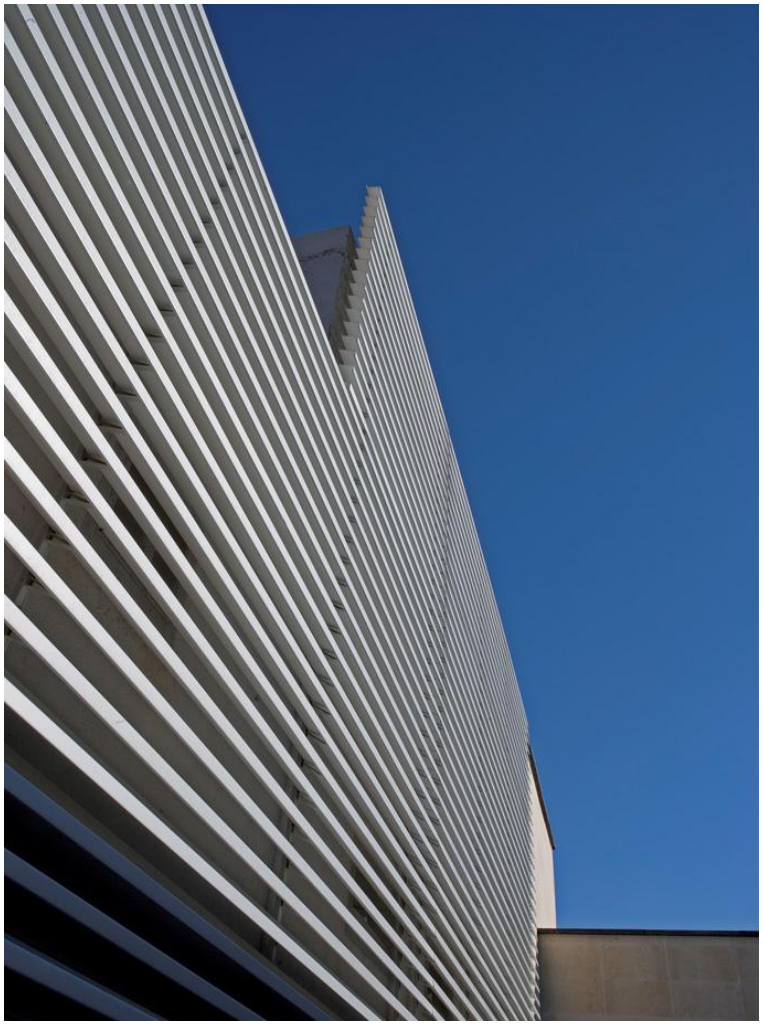

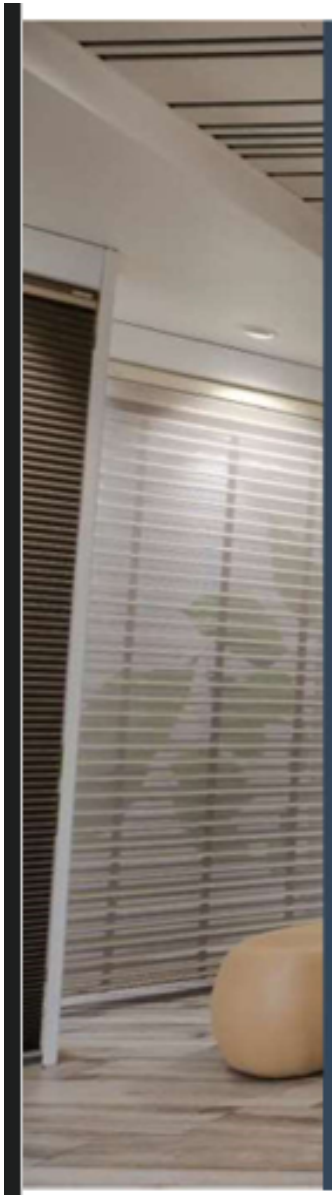

ESSENTIAL TRADE LINKS

T.M. Tower, NH-47 Bypass
Nettoor, Kochi - 682040
Kerala, India
+91 484 270 1011
+91 974 534 1011
mail@essentialtradelinks.com
www.essentialtradelinks.com

